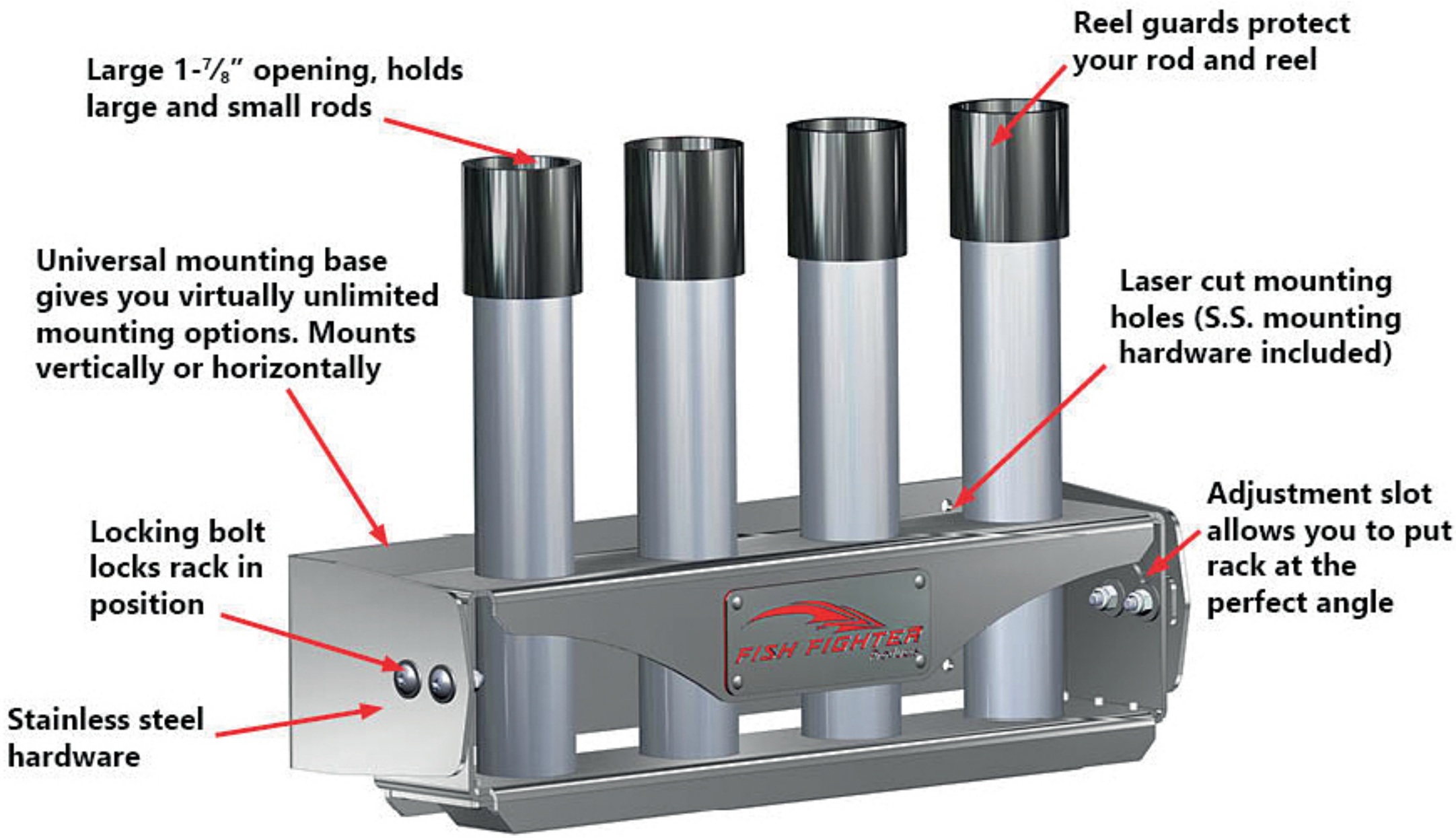
Large 1-⅞" opening, holds large and small rods
Reel guards protect your rod and reel
Universal mounting base gives you virtually unlimited mounting options. Mounts vertically or horizontally
Laser cut mounting holes (S.S. mounting hardware included)
Adjustment slot allows you to put rack at the perfect angle
Locking bolt locks rack in position
Stainless steel hardware
FISH FIGHTER