GP330B Dimensional Drawings:

GPS/WAAS Receiver Antenna GP330B 0.22 kg 0.49 lb

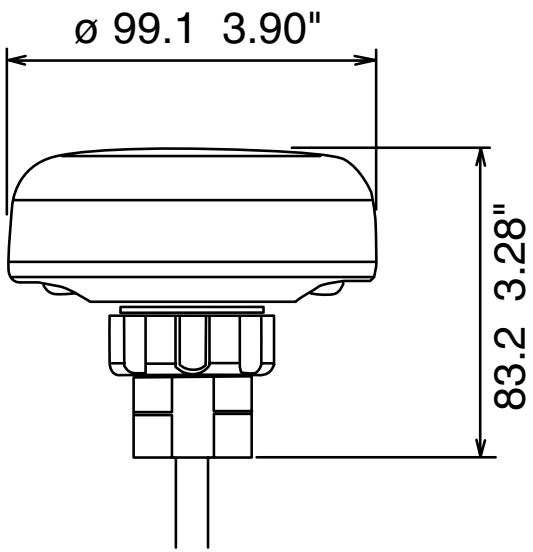

DRS2D/DRS4D Dimensional Drawings:

19" Radome Radar Sensor DRS2D 6.5 kg 14.3 lb

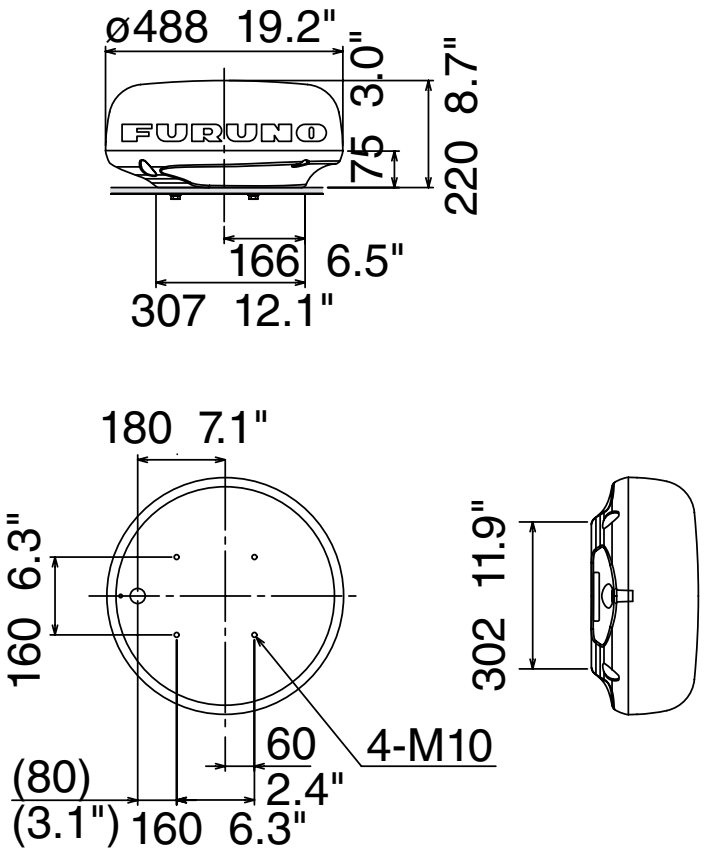

24" Radome Radar Sensor DRS4D 7.5 kg 16.5 lb

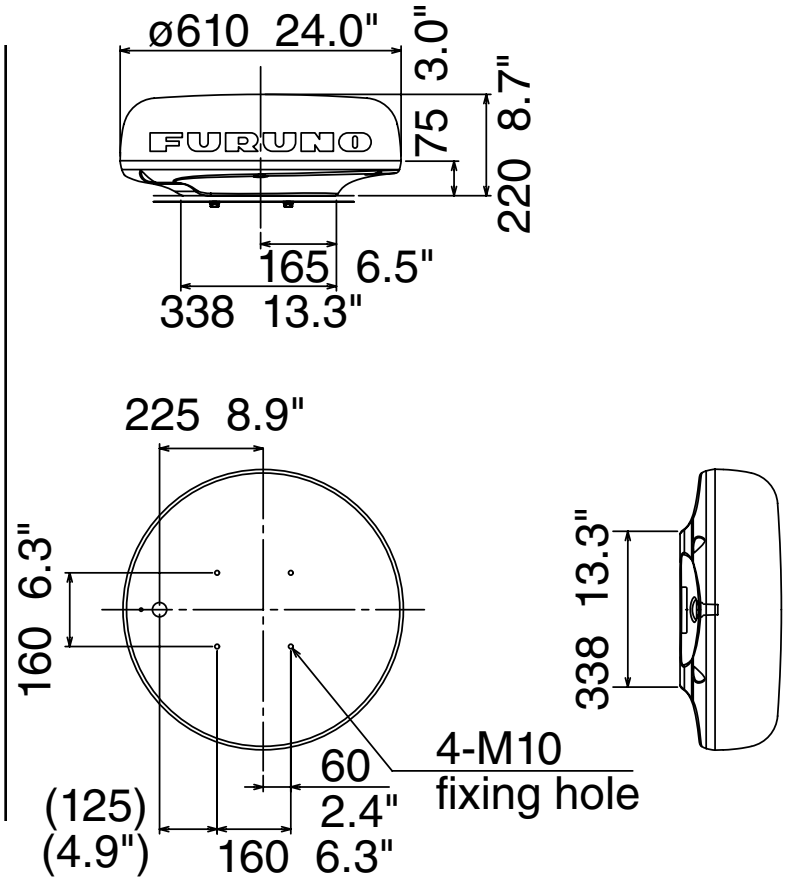

FURUNO