M-10281 | 1

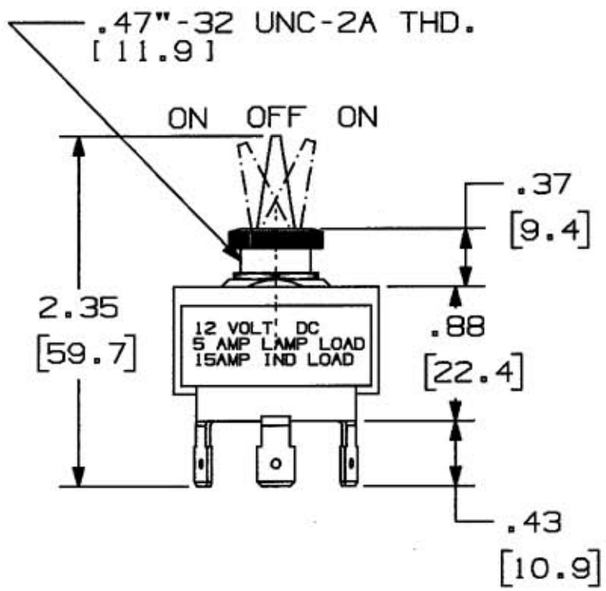

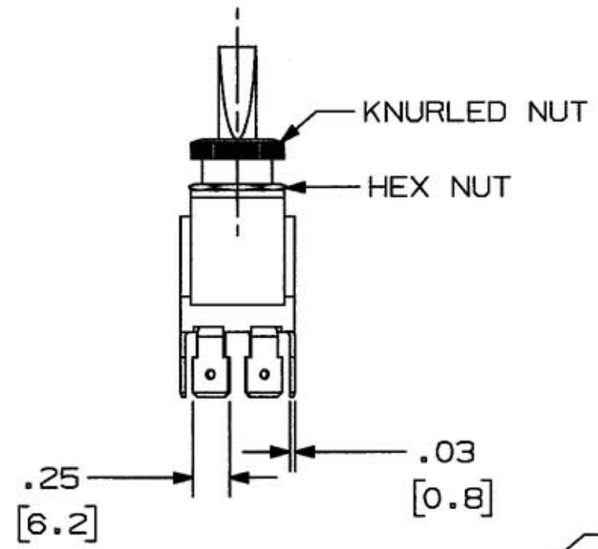

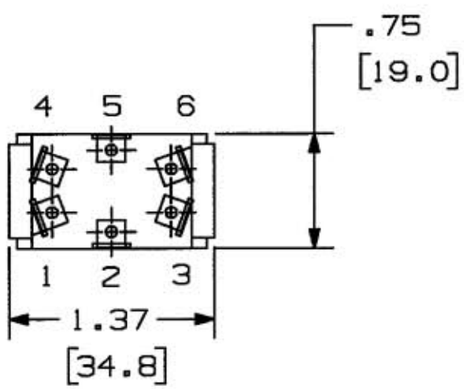

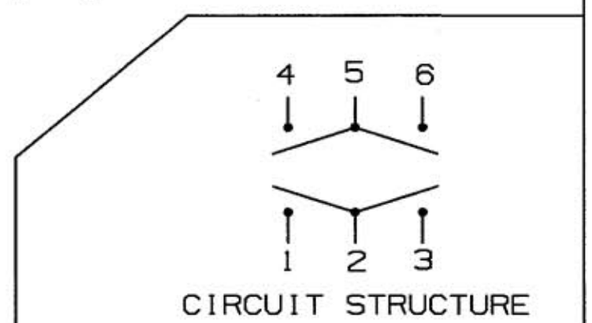

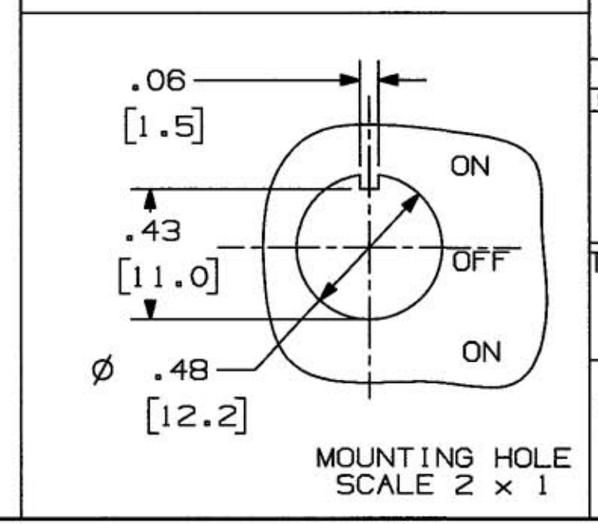

NOTE
1. DIMENSIONS IN INCHES [MILLIMETERS].
2. SUPPLIED ASSEMBLED WITH:
   (1) .47"-32 THD. KNURLED NUT (BRASS, BLACK OXIDE).
   (1) .47"-32 THD. HEX NUT (BRASS,NICKEL PLATE)

CATALOG NO. M223SP

CODE 74545

LIST OF PARTS

DESCRIPTION	MATERIAL	FINISH
REF. D53435		

SYM	REVISIONS	APP	DATE
1	RELEASED PER DCN13301 GPK	JPP	

THE DESIGN AND DIMENSIONS OF THE PRODUCT SHOWN ON THIS DRAWING ARE SUBJECT TO CHANGE WITHOUT NOTICE

TITLE MARINE SWITCH
DPDT ON/OFF/ON
PLASTIC STEM

TOLERANCES UNLESS OTHERWISE SPECIFIED
FRACTIONS ±1/64
DECIMALS ±.005
ANGLES ±2°

WIRING DEVICE-KELLEMS
HUBBELL INCORPORATED
BRIDGEPORT, CT

DR. BY GPK | APP. BY JPP
TR. BY | SCALE 1=1
CHK'D BY TCM

DIMENSION SHEET FOR CAT. NO.
REPAIRABLE ☐ NON-REPAIRABLE ☐
B
M-10281
1

When it comes to quality marine electrical distribution, Hubbell is the brand you can depend on.