M-10444 | 3

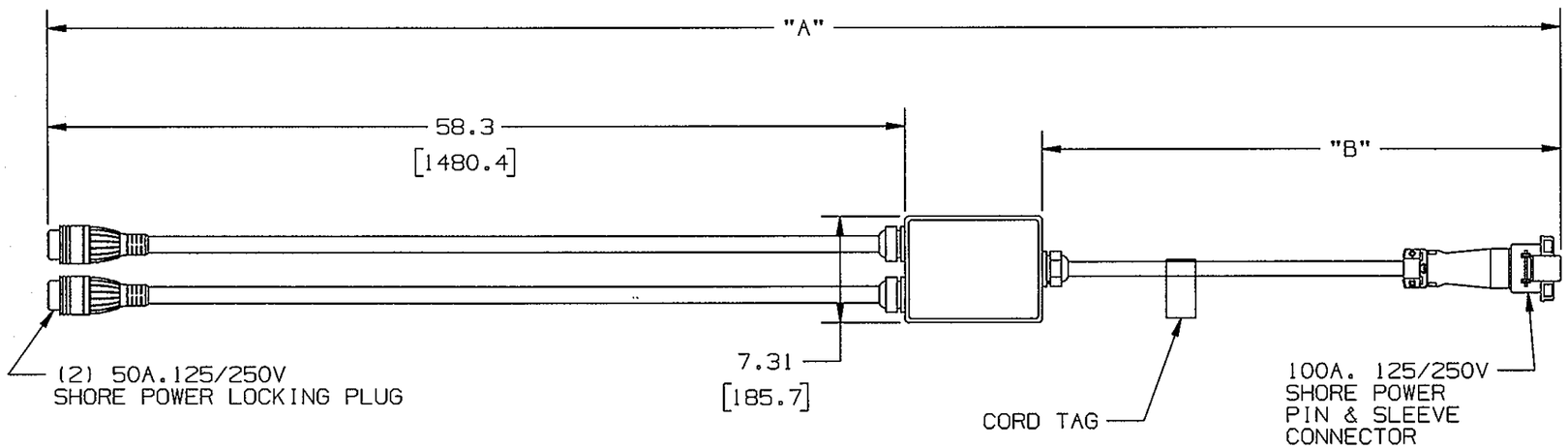

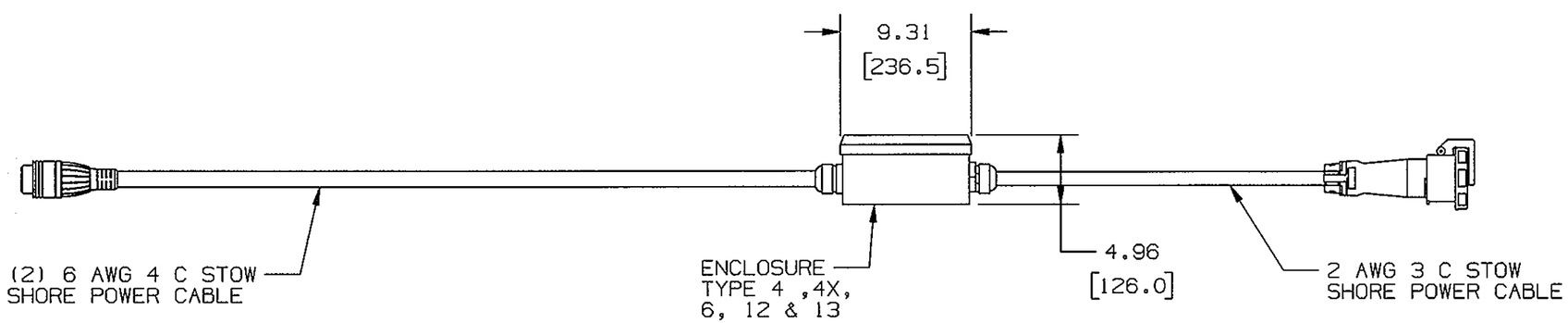

NOTES: (UNLESS OTHERWISE SPECIFIED)
1. DIMENSIONS IN INCHES [mm].

CAT. NO.	DIM "A"	DIM "B"
YQ100PLUS	(102.8) [(2612.2)]	35.2 [895.3]
YQ100PLUSM1	(142.2) [(3611.9)]	74.6 [1894.8]

CODE 74545

LIST OF PARTS

DESCRIPTION	MATERIAL	FINISH

SYM	REVISIONS	APP	DATE
3	ADDED TABLE WITH CAT. YQ100PLUSM1. REMOVED YQ100PLUS FROM TITLE. REPLACED "A" AND "B" WITH DIMENSION TEXT. PER DCN 22686 SPN	DJP	
2	ADDED CORD TAG. PER DCN# 21240 EMD		
1	RELEASE PER DCN 13595 RCM	SL	

THE DESIGN AND DIMENSIONS OF THE PRODUCT SHOWN ON THIS DRAWING ARE SUBJECT TO CHANGE WITHOUT NOTICE

TITLE
100 AMP
MARINE ADAPTER

TOLERANCES UNLESS OTHERWISE SPECIFIED
FRACTIONS ±1/64
DECIMALS ±.005
ANGLES ±2°

WIRING DEVICE-KELLEMS
HUBBELL INCORPORATED
BRIDGEPORT, CT

DR. BY RCM | APP. BY SL
TR. BY | SCALE N/A
CHK'D BY SL

DIMENSION SHEET FOR CAT. NO. SEE TABLE

REPAIRABLE ☐ NON-REPAIRABLE ☐

B

M-10444

3

When it comes to quality marine shore power, Hubbell is the brand you can depend on.