MOUNT DIMENSIONS (NOT TO SCALE)

449 Clamp Mount

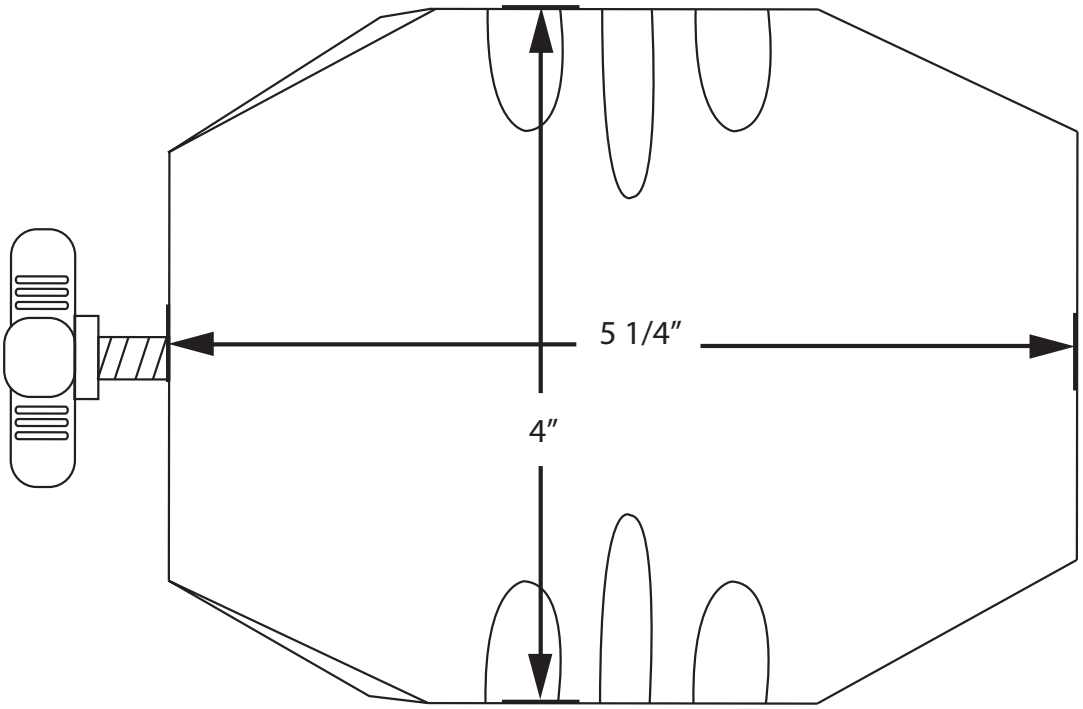

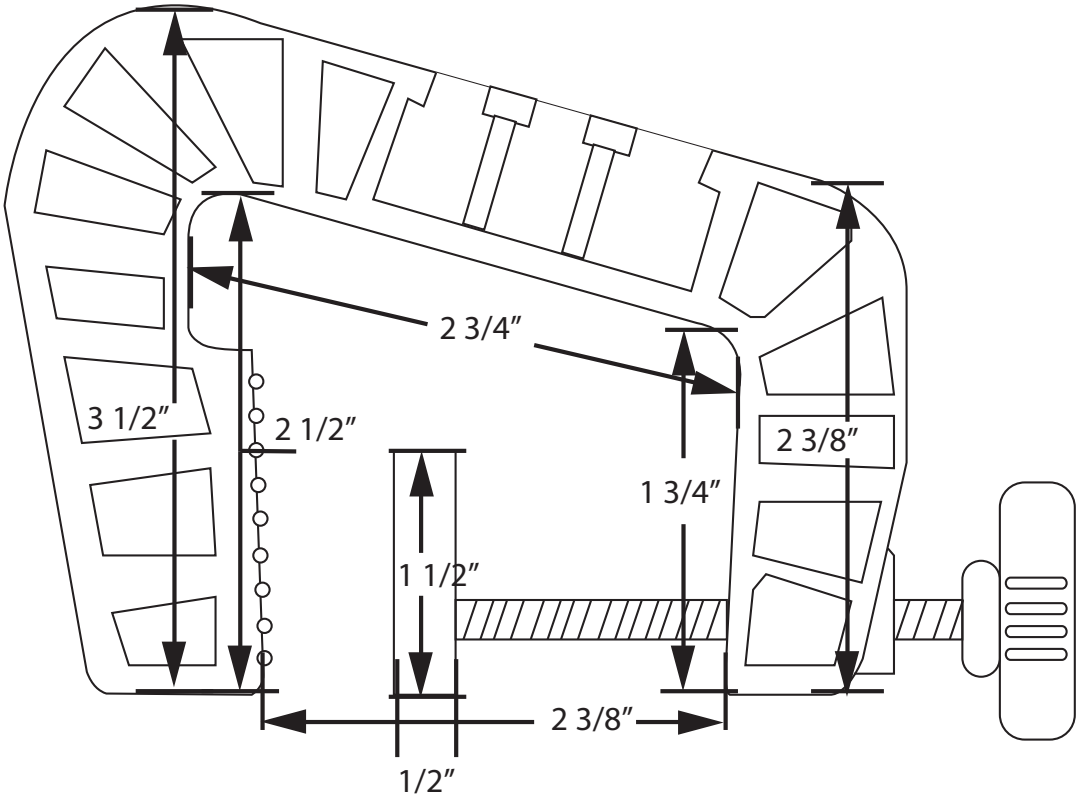

If you're looking for quality rod holders & storage, visit our website.