SEACHOICE PRODUCTS The Quality Choice

INSTALLATION INSTRUCTIONS FOR SEACHOICE OUTRIGGER POLE HOLDERS

READ ALL INSTRUCTIONS BEFORE PROCEEDING

These outrigger pole holders are designed to be mounted with the tubular portion of the plates slanting aft, as shown below.

1) The above outrigger pole holders must be mounted on a surface that allows approximately 3 inches of clearance below the flange. The poles should be parallel when in their vertical position.
2) Using a hole saw, cut a 1-1/2 inch hole for Cat. No. 88751 at a 45° angle to the mounting surface and in a forward direction. It may be necessary to start the hole by cutting straight down and then turning to the desired angle.
3) If necessary trim the hole with a rasp or file so that the flange fits flat onto the mounting surface (see diagram). **Do not attempt to draw the flange down with the mounting bolts, otherwise damage to the holder will result.**
4) Using the outrigger pole holder plate as a guide, mark the four mounting holes. Remove the holder plate and drill holes for four 1 /4 inch flat or oval head mounting bolts.
5) Place holder plate in place and secure it with the four 1/4 inch mounting bolts.
6) The outriggers with their trolling pin or clip, lead lines and guides should be installed on the boat as indicated by the diagrams below. The line to the pulley should be tight enough to prevent the pole and holder from vibrating out of the holder socket.

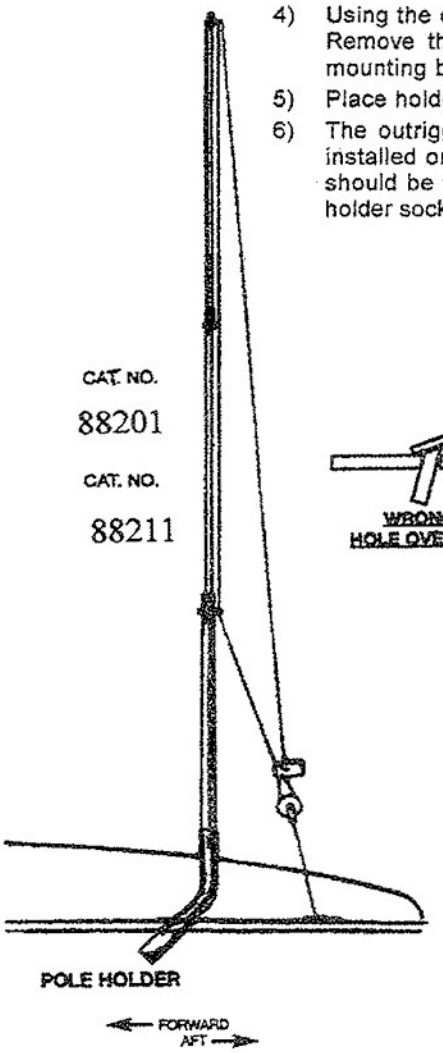

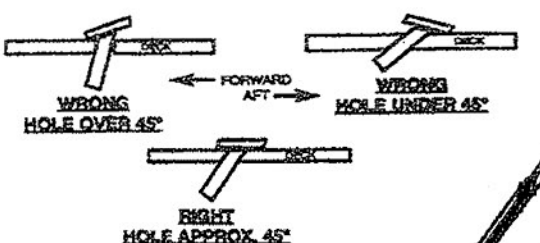

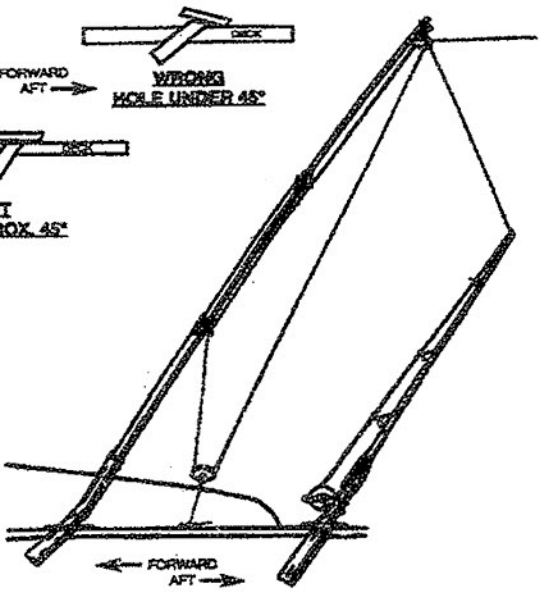

On our website you can discover more about trolling gear.