| REVISION HISTORY | | | |
|---|---|---|---|
| REV | DATE | BY | DESCRIPTION |
| A | 03FEB2016 | DMS/YGC | PRN: P2016-0231 |

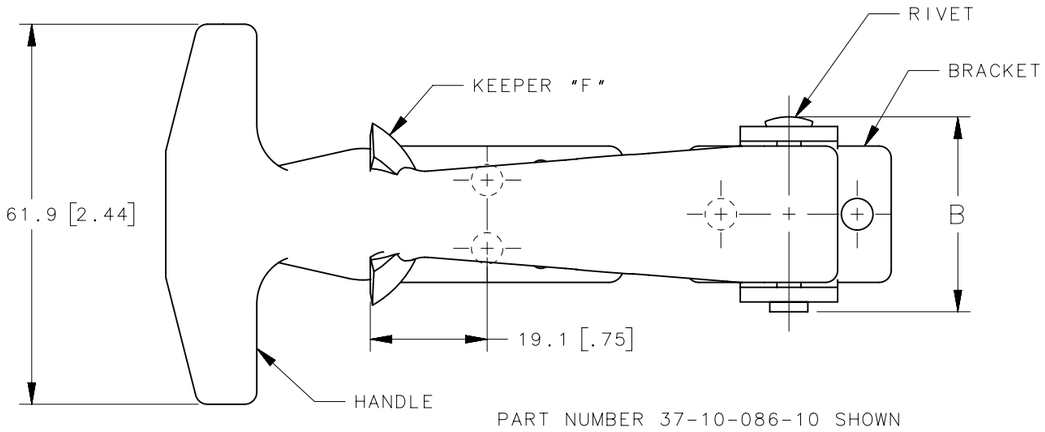


PART NUMBER 37-10-086-10 SHOWN

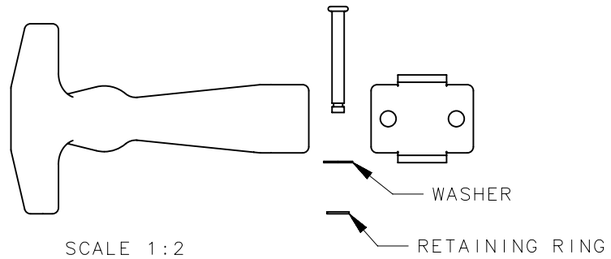


SCALE 1:2
PART NUMBER:
37-10-087-10 AND 37-20-087-10
SHIPPED UNASSEMBLED - BULK.

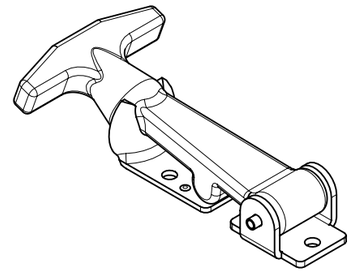

SCALE 1:2

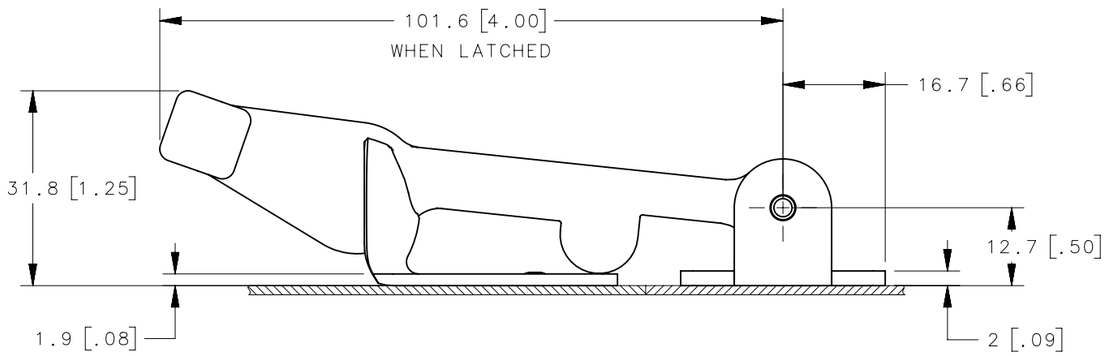


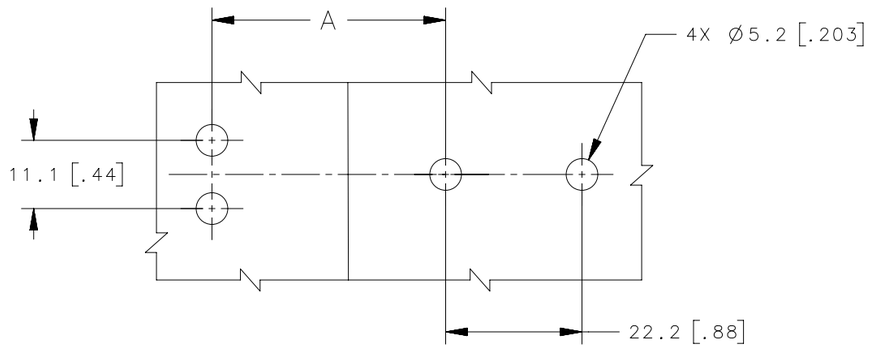


PANEL PREPARATION

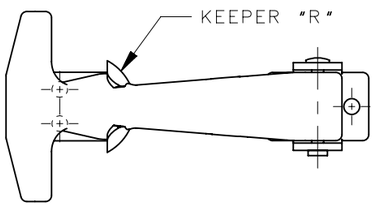


PART NUMBER 37-20-086-10 SHOWN
SCALE 1:2

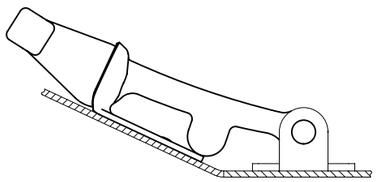

SUITABLE FOR NON-COPLANAR MOUNTING
SCALE 1:2

| PART NUMBER | TYPE OF COMPONENT | HANDLE | BRACKET | RIVET/STUD | KEEPER | KEEPER TYPE | A | B |
|---|---|---|---|---|---|---|---|---|
| | | MATERIAL, FINISH | | | | | | |
| 37-20-087-10 | LATCH SHIPPED UNASSEMBLED | EPDM RUBBER, BLACK | SEE NOTE 2 | SEE NOTE 2 | SEE NOTE 2 | R | 73[2.88] | 34.1[1.34] |
| 37-10-087-10 | LATCH SHIPPED UNASSEMBLED | EPDM RUBBER, BLACK | SEE NOTE 2 | SEE NOTE 2 | SEE NOTE 2 | F | 38.1[1.50] | 34.1[1.34] |
| 37-25-086-24 | KEEPER | - | - | - | SEE NOTE 3 | R | - | - |
| 37-11-086-20 | HANDLE SUB-HANDLE ASSEMBLY | EPDM RUBBER, BLACK | SEE NOTE 3 | SEE NOTE 3 | - | - | - | - |
| 37-20-086-20 | LATCH, ASSEMBLED | - | - | - | - | - | 73[2.88] | 31.8[1.25] |
| 37-25-086-17 | KEEPER | - | - | - | SEE NOTE 2 | R | - | - |
| 37-11-086-10 | HANDLE SUB-HANDLE ASSEMBLY | EPDM RUBBER, BLACK | SEE NOTE 2 | ALUMINUM, NATURAL | - | - | - | - |
| 37-20-086-10 | LATCH, ASSEMBLED | - | - | - | - | - | 73[2.88] | 31.8[1.25] |
| 37-15-086-24 | KEEPER | - | - | - | SEE NOTE 3 | F | - | - |
| 37-11-086-20 | HANDLE SUB-HANDLE ASSEMBLY | EPDM RUBBER, BLACK | SEE NOTE 3 | SEE NOTE 3 | - | - | - | - |
| 37-10-086-20 | LATCH, ASSEMBLED | - | - | - | - | - | 38.1[1.50] | 31.8[1.25] |
| 37-15-086-17 | KEEPER | - | - | - | SEE NOTE 2 | F | - | - |
| 37-11-086-10 | HANDLE SUB-HANDLE ASSEMBLY | EPDM RUBBER, BLACK | SEE NOTE 2 | ALUMINUM, NATURAL | - | - | - | - |
| 37-10-086-10 | LATCH, ASSEMBLED | - | - | - | - | - | 38.1[1.50] | 31.8[1.25] |

NOTES:
1. LATCH PACKAGED ONE HANDLE SUB-ASSEMBLY AND ONE KEEPER PER BAG.
   FOR BULK PACKAGING: ORDER HANDLE SUB-ASSEMBLY AND KEEPER PART NUMBERS SEPARATELY.
2. STEEL, ZINC PLATE, BRIGHT CHROMATE PLUS SEALER.
3. STAINLESS STEEL, PASSIVATED.

SURFACE AREA

VOLUME

PROPRIETARY ITEM

EXCEPT FOR USES EXPRESSLY GRANTED IN WRITING, INFORMATION DISCLOSED HEREON IS CONFIDENTIAL AND ALL RIGHTS, PATENT AND OTHERWISE, ARE RESERVED BY SOUTHCO, INC.

THIRD ANGLE PROJECTION

MILLIMETERS [IN]

TOLERANCES UNLESS OTHERWISE NOTED

ALL DIMENSIONS WITHOUT TOLERANCES ARE FOR REFERENCE ONLY.

PER ASME Y14.5M-1994

southco®
CONNECT·CREATE·INNOVATE

DESCRIPTION: 37 FLEXIBLE DRAW LATCH 080 SERIES, T-HANDLE

| SIZE | SYSTEM | DWG NO. | | | |
|---|---|---|---|---|---|
| A3 | NX | J-37-080 | | | |
| DRAWN BY | DATE | SCALE | SHEET | | |
| DMS/YGC | 13JAN2016 | 1:1 | 1 OF 1 | | |

Looking for dependable boat cabin and galley? Rely on Southco for quality and long-lasting products.