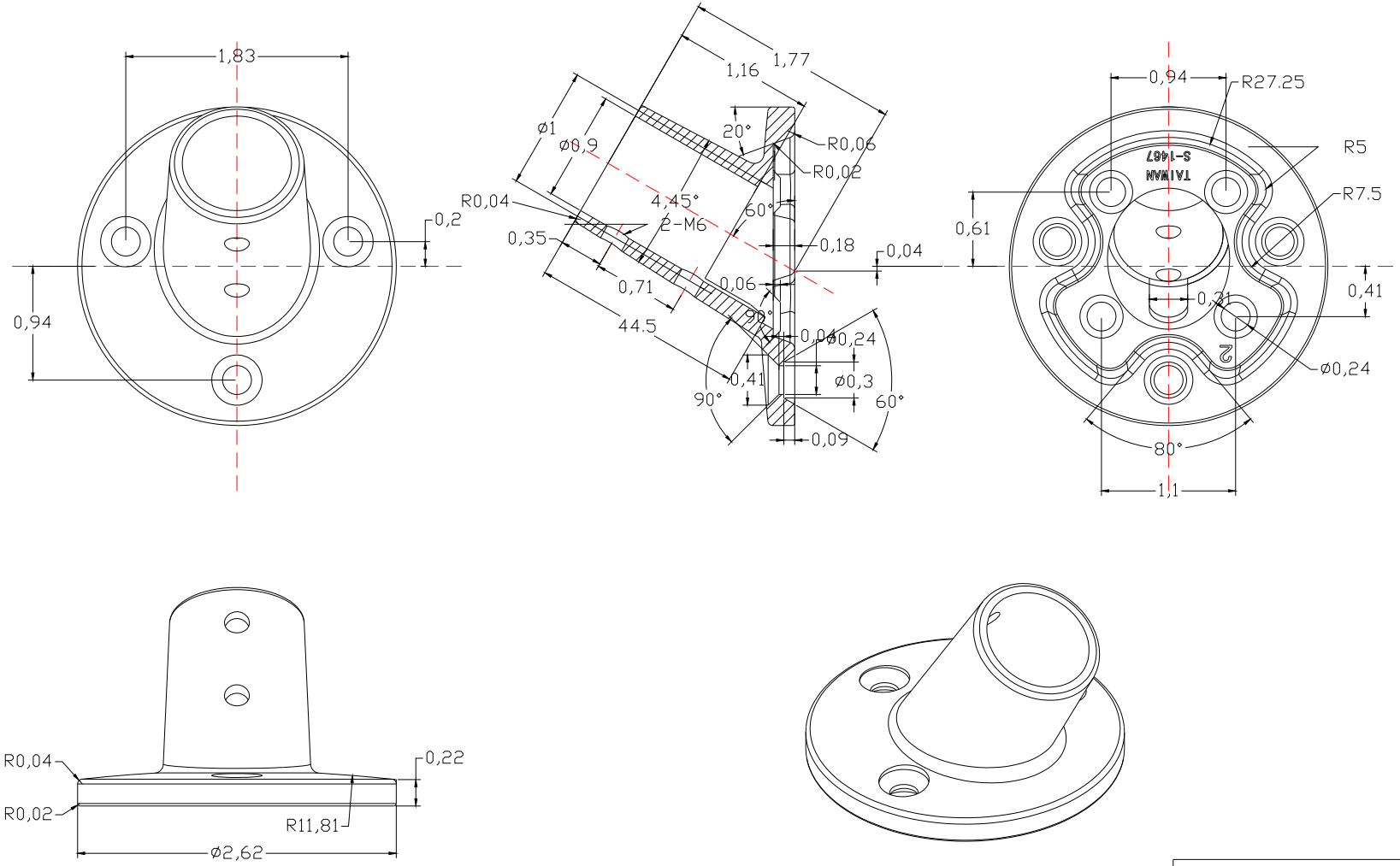

	Whitecap		
Units	INCHES	View	
P/N	S-1467		20161230

When it comes to quality boat tubing & hand rails, Whitecap is the brand you can depend on.